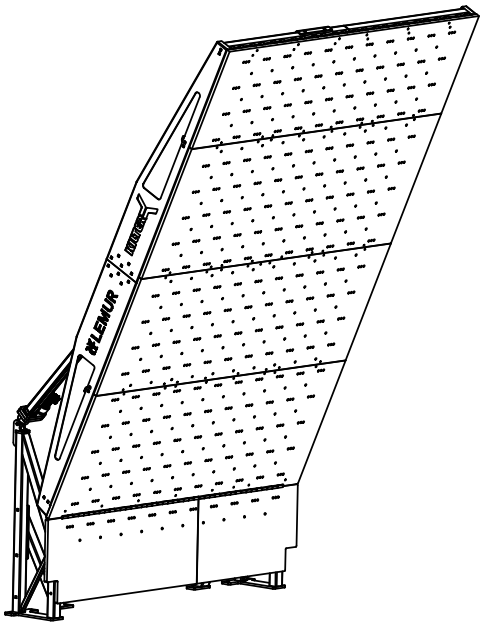

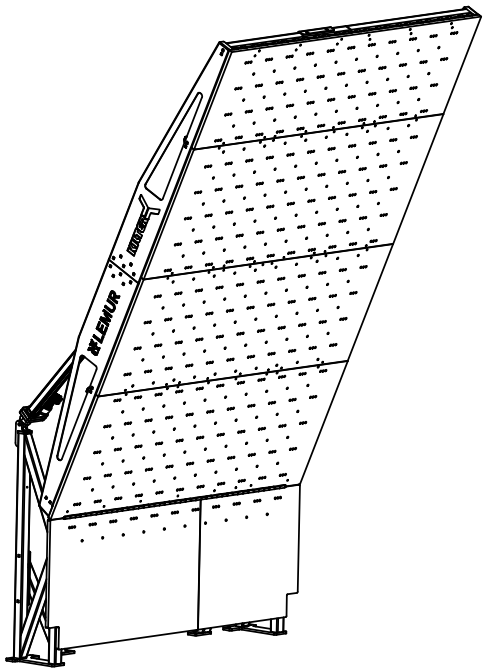

LEMUR

8 X 12 - 27 / 39 KICKBOARDS

SPECIFICATION SHEET

SPECIFICATION	8 x 12 LOW (27in.) KICKBOARD	8 x 12 REGULAR (39in.) KICKBOARD
(MAX) HEIGHT (in/mm)	171/4343	183/4648
DEPTH BEHIND KICKBOARD (IN/mm)	16.75/425	16.75/425
WIDTH (in/mm)	92/2337	92/2337
KICKBOARD HEIGHT (MEASURED FROM FLOOR) (in/mm)	27/686	39/991
HEIGHT OF THE MOVING SECTION (in/mm)	144/3658	144/3658
NUMBER OF T-NUTS (KILTERBOARD LAYOUT)	209	209
NUMBER OF T-NUTS (HOME WALL LAYOUT)	391	391
WEIGHT (Lbs./Kg)	810/367	862/391
OPERATING VOLTAGE (V)	120/240 AC	120/240 AC
OPERATING AMP (A)	3	3
CLIMBING PANELS MATERIAL	BALTIC BIRCH	BALTIC BIRCH
STRUCTURAL FRAME MATERIAL	PLAIN CARBON STEEL	PLAIN CARBON STEEL

Available Options

- Custom Frame Color
- Custom Panel Color
- Custom Logo on Kickboard
- Padding
- Custom T-Nut Layout
- Free Standing Leg Kit

LEMUR

8 X 12 - 27 / 39 KICKBOARDS

DIMENSION TABLE - 39in KICKBOARD

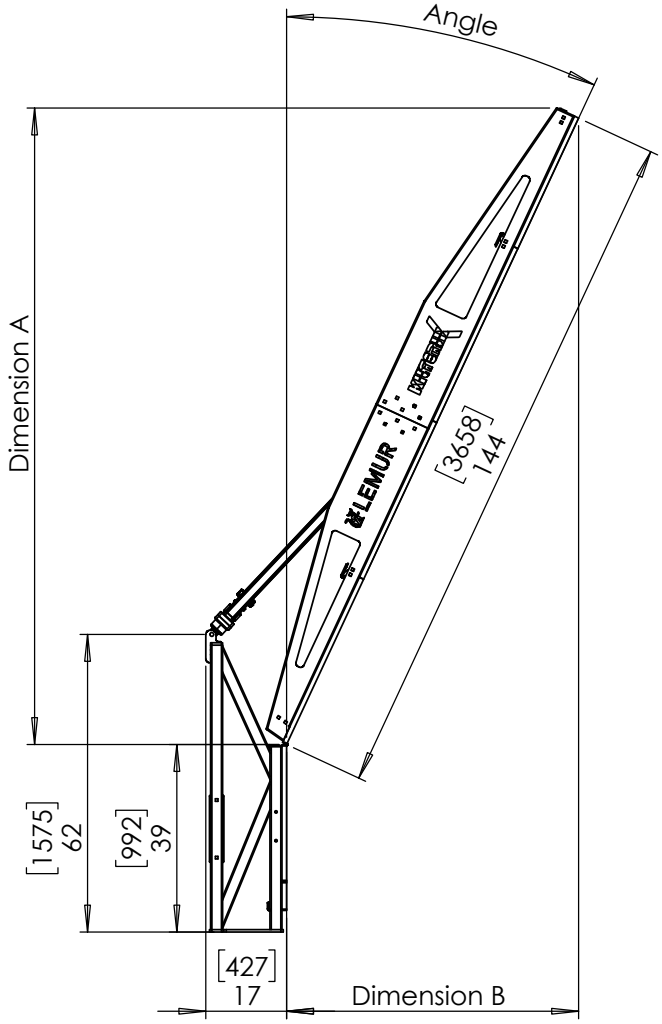

Angle	Dimension A	Dimension B
0	144.0	0.0
10	142.7	25.0
20	137.0	49.3
30	127.2	72.0
40	113.5	92.6
50	96.4	110.3
60	76.3	124.7
70	54.0	135.3

LEMUR

8 X 12 - 27 / 39 KICKBOARDS

FRONT VIEW - 39in KICKBOARD

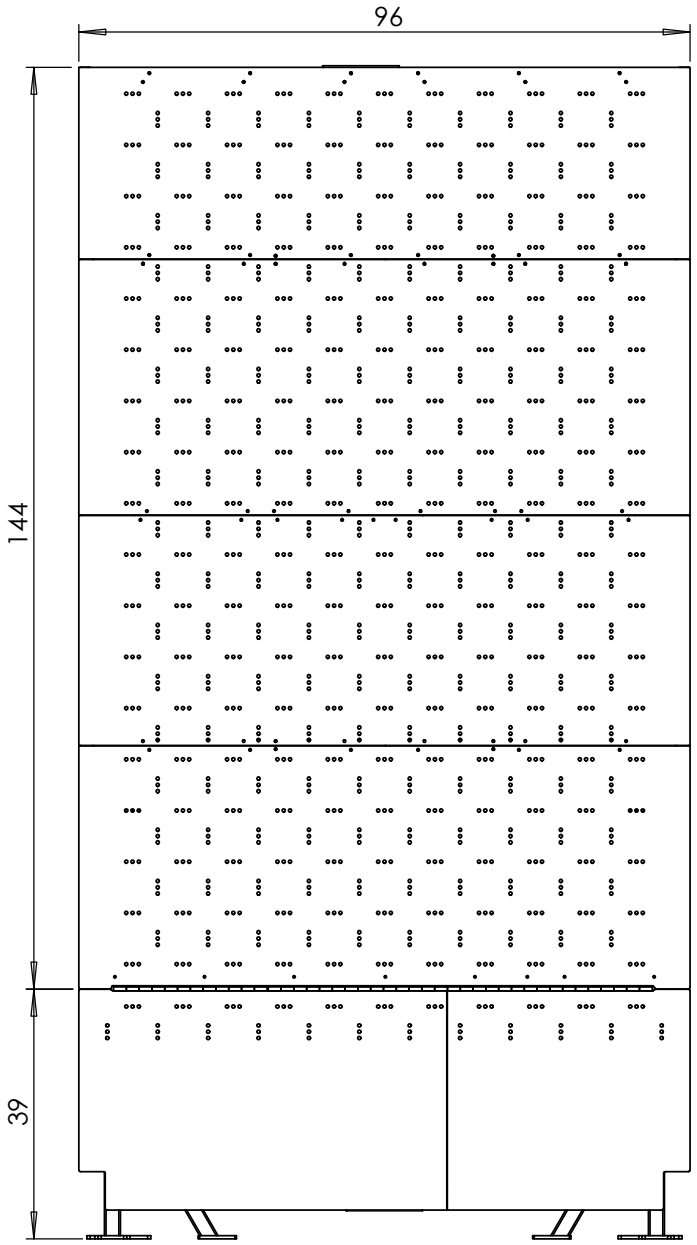

LEMUR

8 X 12 - 27 / 39 KICKBOARDS

DIMENSION TABLE - 27in KICKBOARD

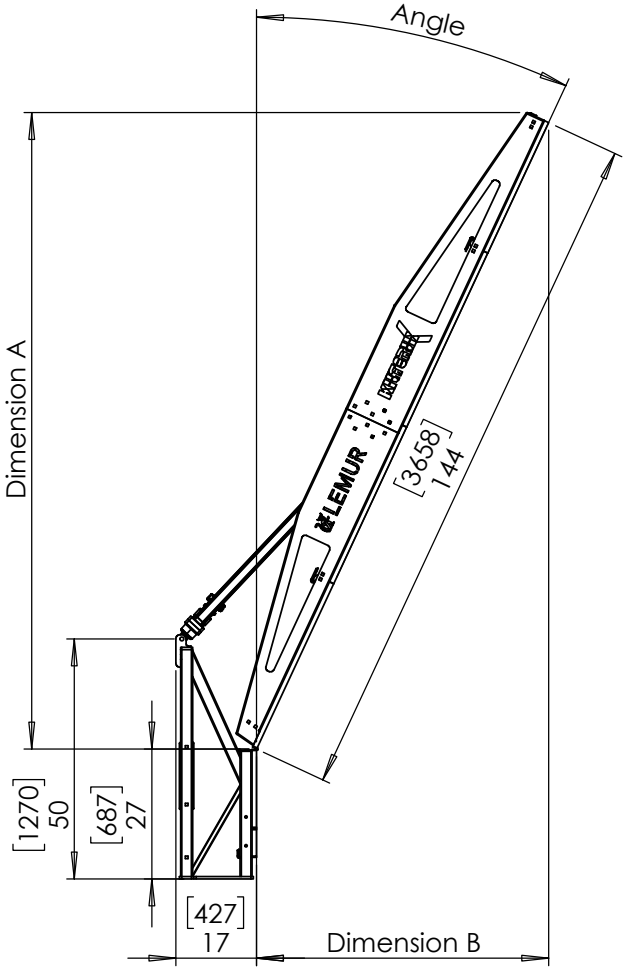

Angle	Dimension A	Dimension B
0	144.0	0.0
10	142.7	25.0
20	137.0	49.3
30	127.2	72.0
40	113.5	92.6
50	96.4	110.3
60	76.3	124.7
70	54.0	135.3

LEMUR

8 X 12 - 27 / 39 KICKBOARDS

FRONT VIEW - 27in KICKBOARD

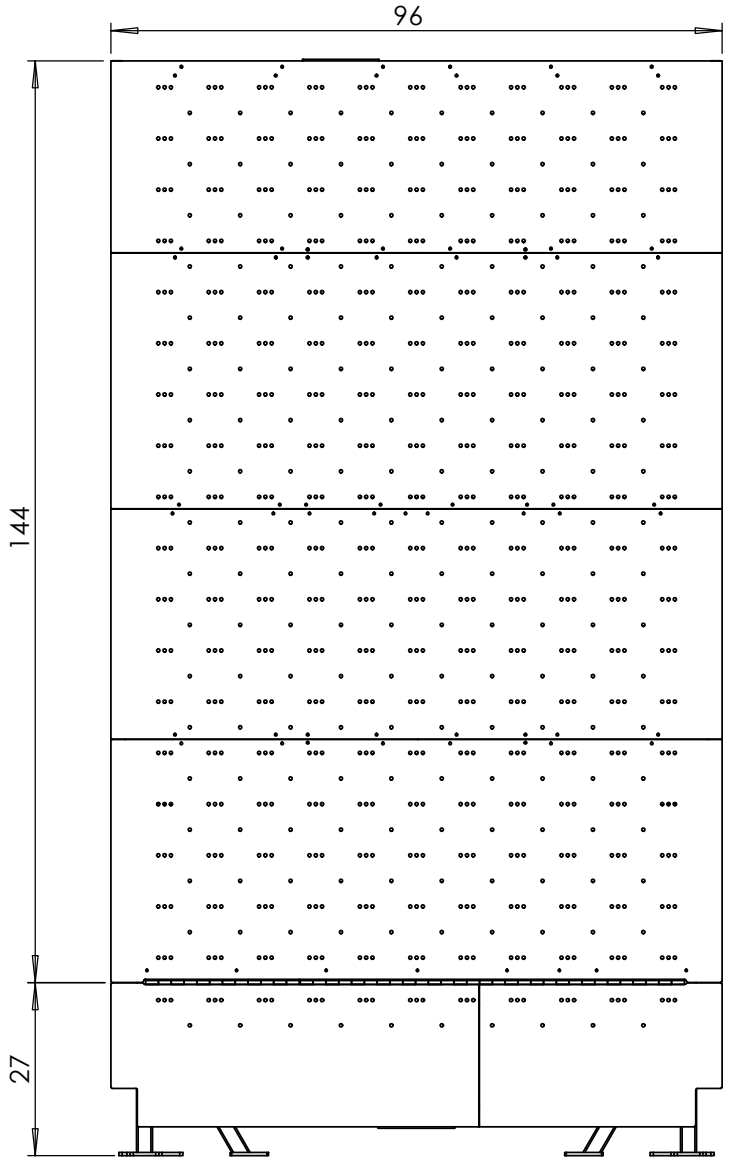

LEMUR

8 X 12 - 27 / 39 KICKBOARDS

HOME WALL CONFIGURATION
(OTHER OPTIONS AVAILABLE)

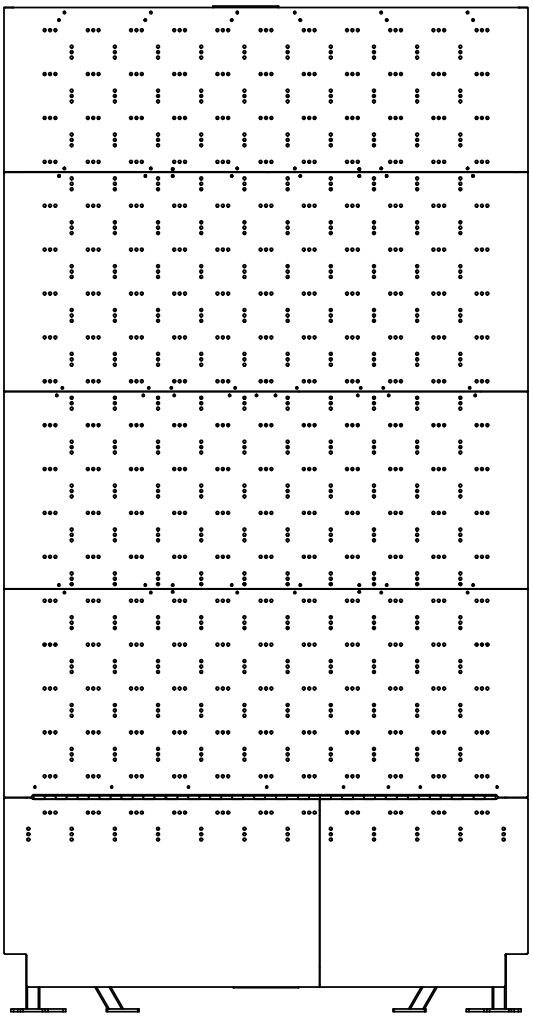

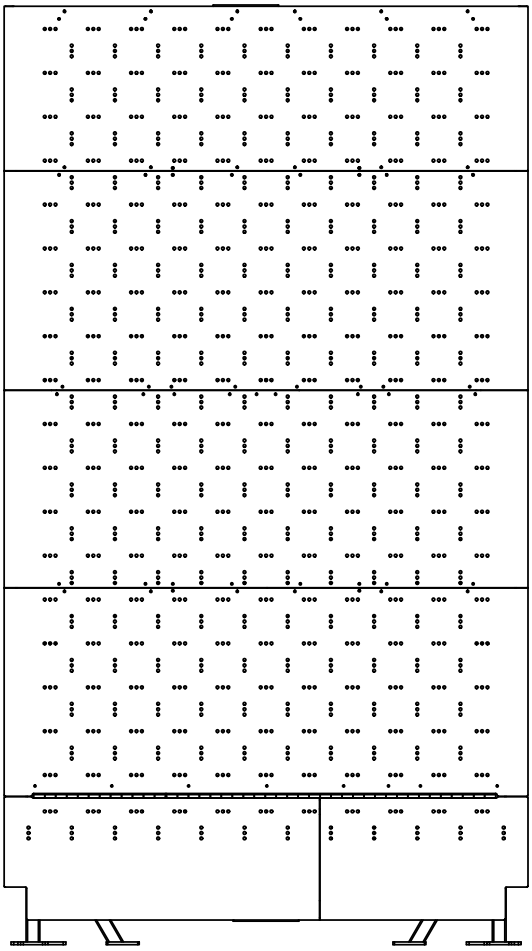

LEMUR

8 X 12 - 27 / 39 KICKBOARDS

LEG KIT OPTION AVAILABLE

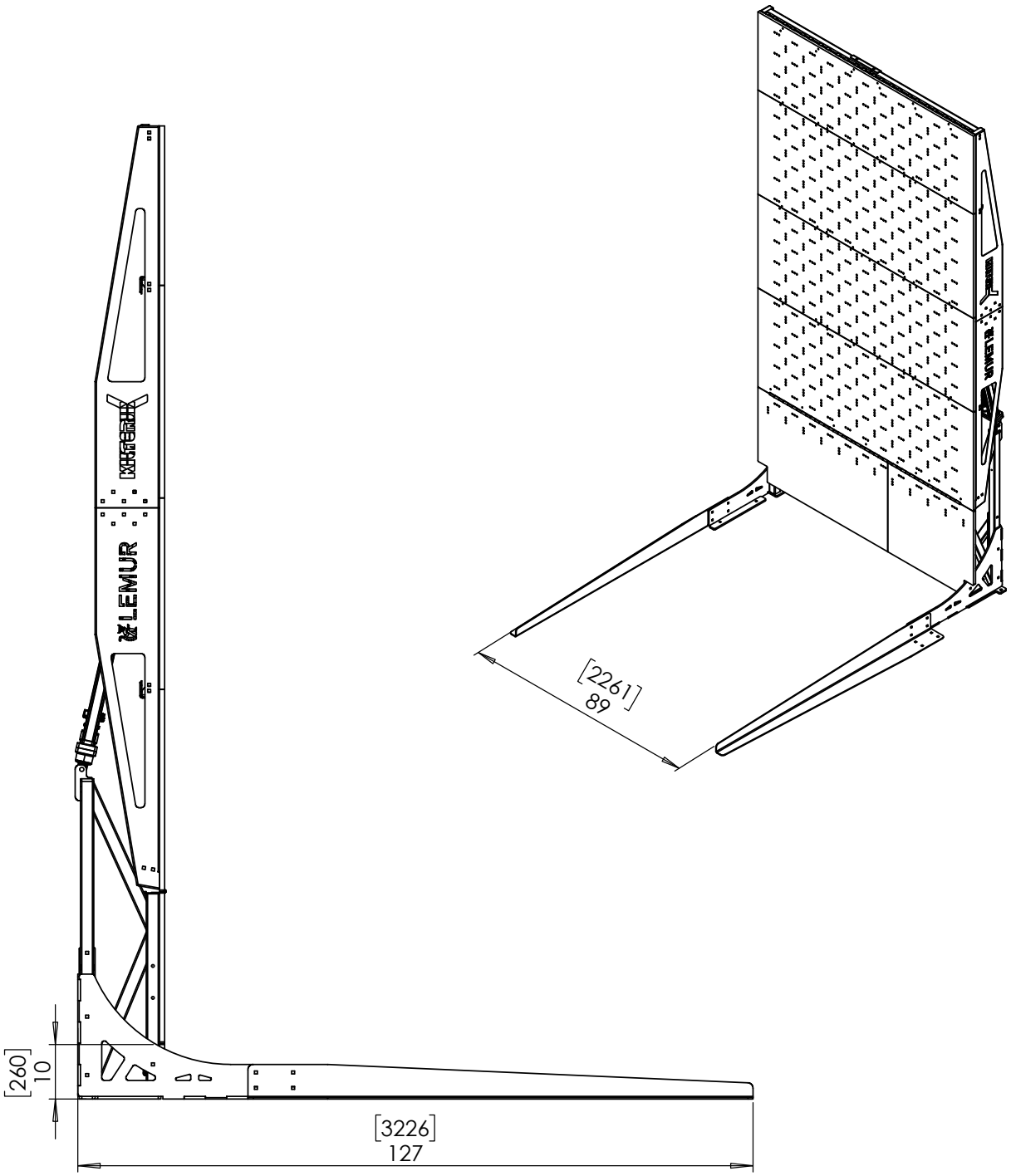

LEMUR

8 X 12 - 27 / 39 KICKBOARDS